Doc.ID 10.51216.404-901-07-A Doc. status 230 | released
View date 2016-11-15 Viewed by BENDER
Art.ID 10.51216.406-00/00A SAP Status 2F

10.51216.404
EGO HiLight
2200/1000W
230V~ **

color assignment/Farbzuordnung
230V without/ohne
240V blue/blau
400V red/rot

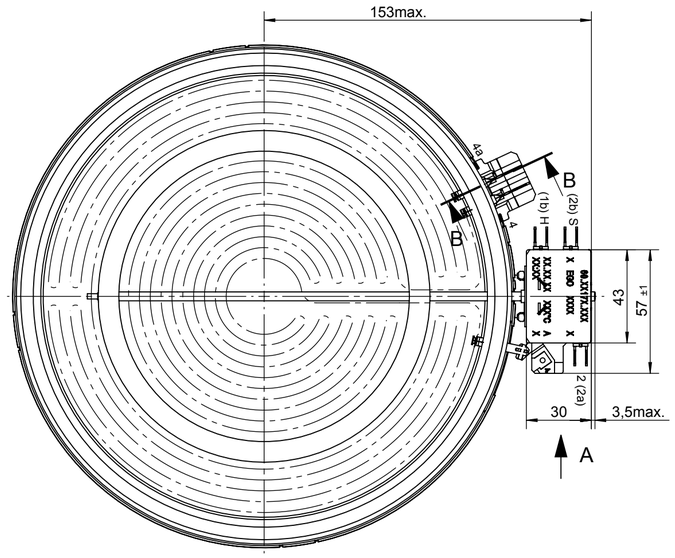

with 20N of centric load
bei 20N mittiger Belastung

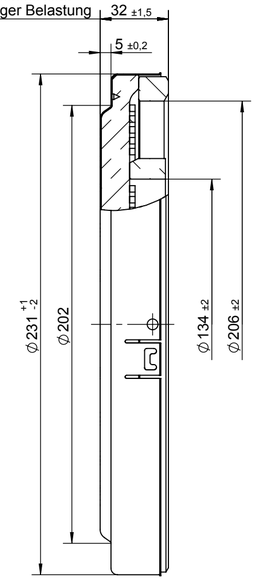

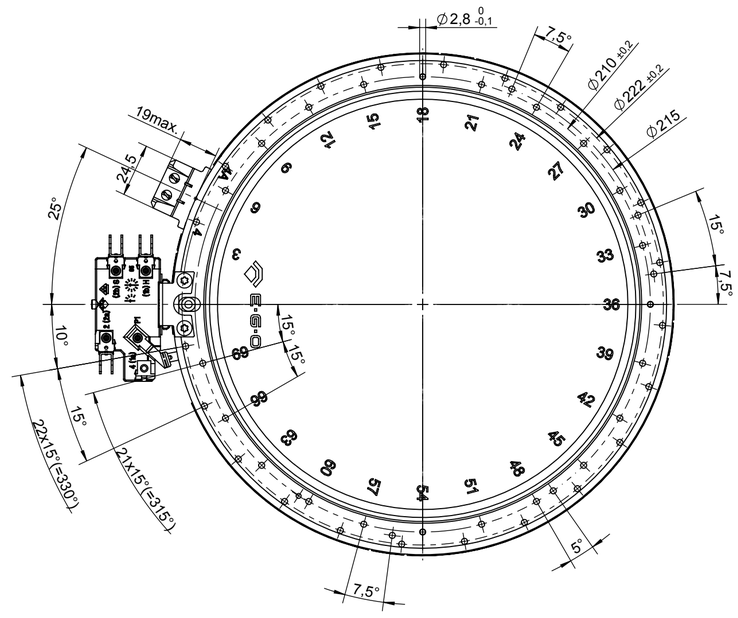

secure only by the spring
embossed edge max. screw in
deep 6mm
thread end ISO 1478-form C
Nur an der Randeinpraegung
federnd niederhalten
max. Einschraubtiefe 6mm
Gewindeende ISO 1478-Form C

Limiter/Begrenzer
60.25173.040
max. permissible temperature
at housing 250°C
max. zulaessige Temperatur
am Gehaeuse 250°C

adjustment/Justierung:
glass surface temperature [$\overline{T}_0$]
CERAN HIGHTRANS eco
Glasoberflaechentemperatur [$\overline{T}_0$]
CERAN HIGHTRANS eco
2 (2a) - 4/4a 540°C
S (2b) - H (1b) out/AUS 65°C

support at inserting
resp. pull off avoids
possible damage
at the temperature control
Abstuetzen beim Stecken
bzw. Abziehen vermeidet
evtl. Beschaedigungen am
Temperaturwaechter

A (1 : 1.5)

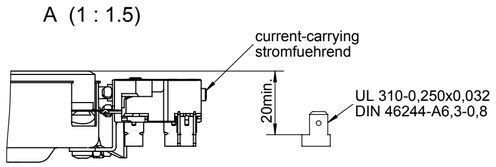

B-B (1 : 1.5)

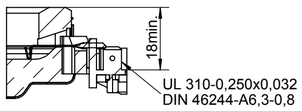

wiring diagram/Schaltschema

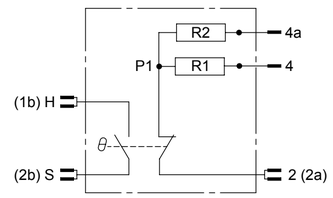

⑧

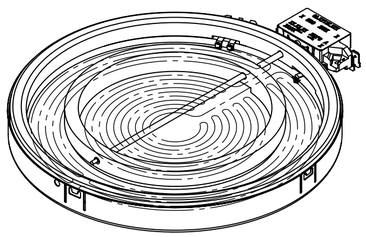

Pos	type Type	W wattage Leistung	V~ voltage Spannung	R1 rated conductor Heizleiterabstufung	R2	R3			patent no. Patent-Nr.	approval marks Pruefzeichen**	
9											
8											
7											
6	10.51216.406	2200	400	1000	1200					X	
5											
4	10.51216.404	2200	230	1000	1200					X	
3											
2											
1											
0											

8	B03076	2013-12-03	This document is exclusively committed to you for the agreed purpose. Any kind of duplication, utilization or communication of its content is prohibited, if not expressly conceded otherwise. Violators are committed to pay compensations. Any claims of existing or future property rights remain unaffected.		
7	B02655	2012-01-12			
6	B02561	2011-07-29			
5	B02501	2011-04-11			
4	B02509	2011-03-31			
3	CD0001	2010-12-15	CAD	Date	Name
2	B02181	2009-11-16	Creat.	2005-08-25	FUERSTA
Cha.	Information No.	Date	Proc.	2013-12-03	REIMOLDS
F.Rel.	B01203	2005-08-25	Rel.	2013-12-03	REIMOLDS

Blank No. EN Mat.No.
Material
Surface Texture ISO 1302
General Tolerances ISO 2768-mH
Scale Unit mm
Scale 1:2
Designation
EGO HiLight 210/140
EGO HiLight 210/140

E·G·O

Drawing No.	Sh.No.	Ver.	Stat.	Sheets	Doc.	Ex.Doc.
10.51216.404	901	7	F			

Origin | Repl.for 10.51216.40X/001 | Repl.by | Ref.